UNIT 1: BIOHAZARDS, BIOSAFETY LEVELS AND CABINETS

Biological hazards, also known as **biohazards**, refer to biological materials (microorganisms, plants, animals, or their byproducts) that pose a threat to the health of living organisms, primarily that of humans. This can include medical waste or samples of a microorganism, viruses, or toxins (from a biological source) that can affect human health.

Types:

- Viruses, such as Coronavirus (COVID-19) and Japanese encephalitis.
- Toxins from biological sources.
- Spores.
- Fungi.
- Pathogenic microorganisms
- Bio-active substances

What are some biohazard examples?

- Human blood and blood products. This includes items that have been affected by blood and other body fluids or tissues that contain visible blood.
- Animal waste. Animal carcasses and body parts, or any bedding material used by animals that are known to be infected with pathogenic organisms.
- Human body fluids. Semen, cerebrospinal fluid, pleural fluid, vaginal secretions, pericardial fluid, amniotic fluid, saliva, and peritoneal fluid.
- Microbiological wastes. Common in laboratory settings, examples of microbiological wastes include specimen cultures, disposable culture dishes, discarded viruses, and devices used to transfer or mix cultures.
- Pathological waste. Unfixed human tissue (excluding skin), waste biopsy materials, and anatomical parts from medical procedures or autopsies.
- Sharps waste. Needles, glass slides and coverslips, scalpels, and IV tubing that has the needle attached.

Consequences: health issues(like food poisoning, infections), environmental damage, loss of productivity(livestock and crops), animal infestations(vomiting).

Biological safety levels are a series of protections specific to autoclave related activities that take place in biological labs. Biosafety levels are individual safeguards designed to protect laboratory personnel, as well as the surrounding environment and community.
Each biosafety level (BSL-1 to BSL-4) is defined based on the following:

- Risks related to containment
- Severity of infection
- Transmissibility
- Nature of the work conducted within the lab
- Origin of the microbe
- Agent in question
- Route of exposure

Pictorial Diagram and explanation:

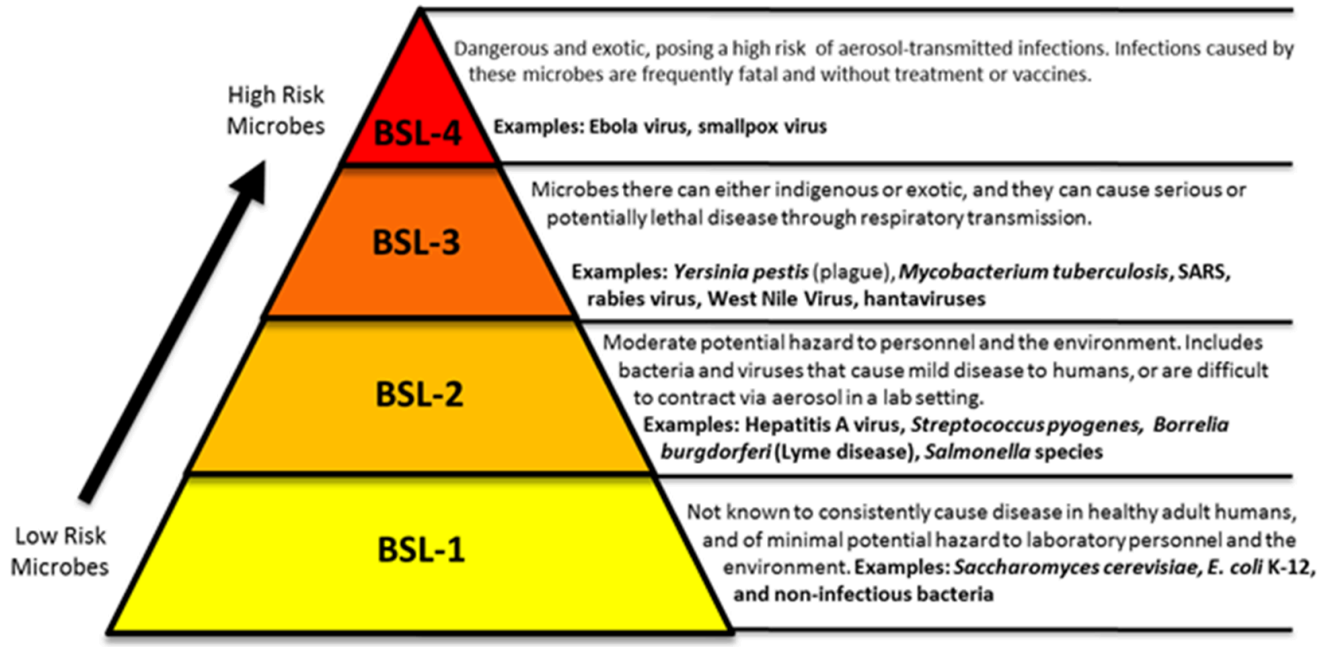

Biosafety Cabinets- Definition, Classes (I, II, III) and Types

Biosafety Cabinets (BSCs) are enclosed workspaces with a ventilated hood that is designed to contain pathogenic microorganisms during microbiological processes.

- The primary purpose of biosafety cabinets is to protect the laboratory personnel and the environment from the pathogenic microorganism as aerosols might be formed during the processing of such microorganisms.
- These cabinets are provided with HEPA-filters that decontaminate the air moving out of the cabinet.
- Laminar hood only provides protection to the sample and not to the personnel and the environment, whereas biosafety cabinets protect all three.
- The use of biosafety cabinets or other such physical containment is not required in the biosafety level 1, but depending on the risk assessment, some processes might require such containment.
- also function to sterilize biological materials that are kept inside the cabinets.

Biosafety Cabinet Classes

- Biosafety cabinets are classified into three classes by the U.S. Centers for Disease Control and Prevention (CDC), each with specific performance characteristics and applications.

- Class I and II Biosafety cabinets are used for **Biosafety levels** I and II but, when used correctly in conjunction with useful microbiological techniques, these provide an effective containment system for safe manipulation of moderate and high-risk microorganisms.
- Class III BSCs are most suitable for work with hazardous agents that require Biosafety Level 3 or 4.

Biosafety Cabinet Class I

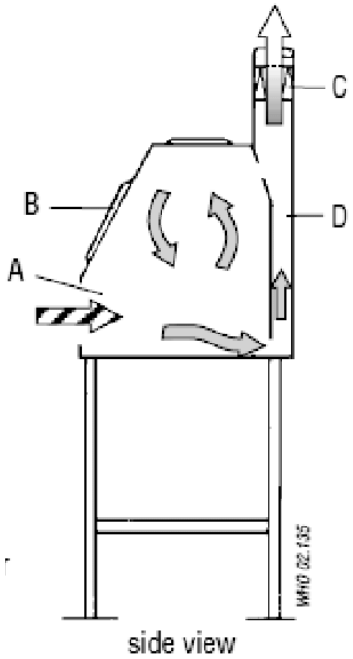

- Class I is the most basic biosafety cabinet that provides protection to the environment and the laboratory personnel.
- It doesn't provide protection to the product as the unsterilized room air is drawn over the work surface.
- used to either enclose specific equipment like centrifuges or for procedures like aerating cultures that might potentially generate aerosols.
- either ducted (connected to the building exhaust system) or unducted (recirculating filtered exhaust back into the laboratory).
- In the Class I BSC, the room air is drawn in through the opening that also allows the entry of the operator's arm during work.
- The air inside the cabinet then takes in the aerosol particles that may have been generated and moves it away from the operator towards the HEPA filter.
- The air moving out of the cabinet is thus sterilized via the HEPA filters before its discharge to the environment.
- In this way, the cabinets protect the operator and the environment from the aerosol but not the sample.

Biosafety Cabinet Class II

- provide both kinds of protection (of the samples and the environment) since makeup air is also HEPA-filtered.
- The principle of operation of Class II cabinets involves a fan mounted in the top of the cabinet that draws a curtain of sterile air over the workstation where the biological products are being handled.
- The air then moves underneath the workstation and back up to the top of the cabinet before passing through the HEPA filters.
- The exhaust that moves out of the facility consists of air being drawn into the front of the cabinet underneath the work surface.
- The air drawn in acts as a barrier against the potentially contaminated air coming back out to the operator.

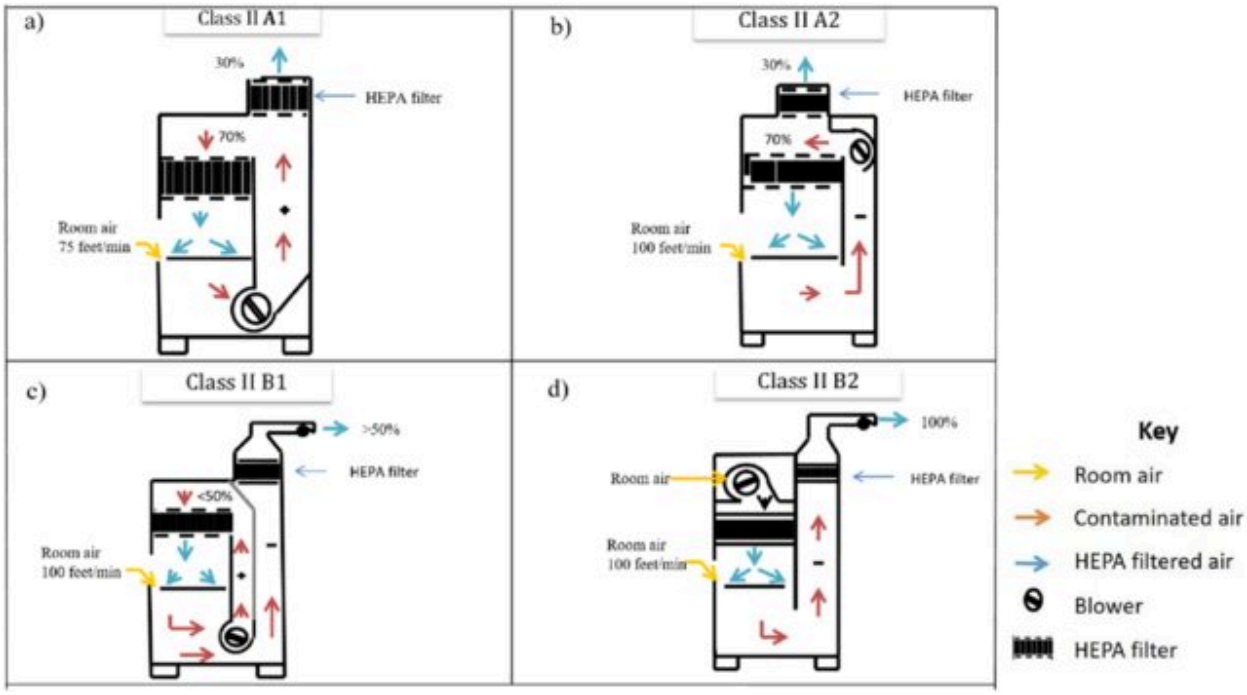

1. **Type A1**
   - The type A1 cabinets have a minimum inflow velocity of 75 ft/min where the contaminated air divided just above the work station and mixes with the inflow air.
   - The mixed air is then drawn through a duct network so that it reaches the back of the cabinet.
   - After this, air might be either recirculated after passing through the HEPA filters or exhausted out of the cabinet, also through a HEPA filter.
   - This type of cabinet is not as widely used as it is not safe to work with hazardous chemical substances.
2. **Type A2**
   - minimum inflow velocity of 100 ft/min.
   - air enters the chamber through the front aperture, which provides operator protection.
   - The inflow air mixes with the downflow air (from the top of the cabinet)and enters the front intake grille and then passes over the workstation where the air splits.
   - Approximately 60% to 70% of the contaminated air is recycled and pushed back into the workstation in the chamber through the downflow HEPA filter, while the remaining 30% to 40% is exhausted through the exhaust HEPA filter.
   - However, if hazardous, volatile chemicals are to be used within the cabinet, along with the microbiological work, exhaust must be released into the atmosphere through the direct duct system.
   - Because of the chances of the release of hazardous chemicals into the environment, A2 type cabinets are also not extensively used.

3. **Type B1**
    - Type B cabinets are different from Type A cabinets as they use single-pass airflow to control the flow of hazardous vapors.
    - Type B1 cabinets divide the airflow so that the contaminated air is directed towards the exhaust system while the air between the operator and the workstation mixes with the inflow and is recirculated.
    - The exhaust air dispersed out of the facility should be passed through the HEPA filters to provide protection to the environment.
    - These cabinets have a dedicated duct system which allows the release of the contaminated air out of the facility.
    - In the case of Type B1 cabinets, 40% of the air is recirculated, whereas the remaining 60% is exhausted out of the facility.
4. **Type B2**
    - For a Type B2 BSC, like in Type A cabinets, the air is drawn in from the front opening creating an air barrier that protects the operator.
    - Air is also drawn in from an opening at the top of the cabinet that supplies the downflow of air in the cabinet.
    - The air then passes through a HEPA filter, where 100% of the air is exhausted through a dedicated duct system with an exhaust fan motor. The air moving out of the facility is thus sterilized before its release into the atmosphere.
    - The advantage of this system is the removal of toxic vapors that are generated in the cabinet with no recirculation within the BSC.
    - All of the contaminated airflow (100%) in a Type B2 cabinet is externally exhausted which means the air drawn into the cabinet is 100% exhausted into the atmosphere.
    - As a result, none of the air drawn into the B2 from either inflow or downflow is recycled within the airflow system.
    - Because none of the air is recirculated, these cabinets are the best to be used for tasks involving the release of chemical vapors.
    - Type B2 cabinets, however, are expensive, and their use is limited to toxicology laboratories where protection against hazardous chemicals is imperative.
5. **Type C1**
    - Type C1 cabinets are similar to Type B cabinets in their working mechanism, but these are designed to reduce operating costs add flexibility to the laboratories.
    - These cabinets work by using the single-pass airflow system where the cabinets move the air by mixing it with the downflow air separated into columns for recirculation.
    - The air above the workstation is drawn with a second fan which moves the contaminated air out through the exhaust system with a HEPA filter.

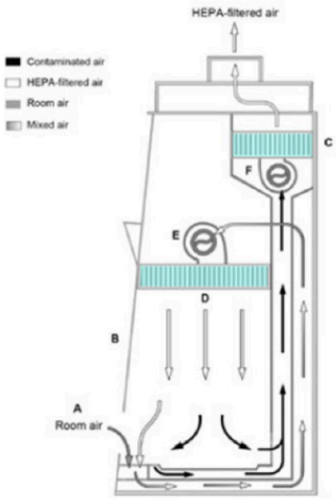

- In this way, the cabinets provide protection to the environment, the operator, and the workstation or the biological material.
- Type C cabinets are different from Type A cabinets as they use a single-pass airflow mechanism where the air is not circulated.
- These differ from Type B cabinets in that they don't require a dedicated ducted exhaust system, can work for an extended duration to increase operator protection in the case of exhaust failure, and can even run without the exhaust at all.

Biosafety Cabinet Class III

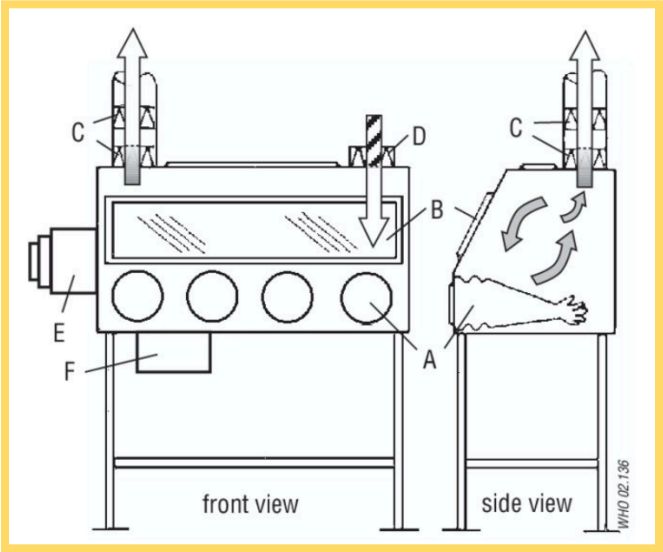

- Class III cabinets are leak-tight, totally enclosed but ventilated cabinets, where all air that either enters or leaves through the facility passes through a HEPA filter.
- The cabinets are provided with rubber gloves that are attached to the system to be used during operations in the cabinet. This is why these cabinets are also termed 'glove boxes'.
- The cabinet even has a transfer chamber that facilitates the sterilization of materials before they leave the glove box.
- Even though the gloves restrict the hand movement of the operator inside the cabinet, it prevents direct contact between the operator and the samples.
- The exhaust air is treated with double HEPA filters or HEPA filters in combination with incineration.
- These cabinets can be used for all four Biosafety levels (1, 2, 3, and 4). But these are the most important for the manipulation of biological materials in the Biosafety level 4.
- These cabinets are mostly custom-built for specific laboratories with lab equipment built inside the chamber.
- All of these structural and design features provide maximum protection to the operator, the environment, and the sample against the high-risk group 4 pathogenic organisms.

// **Class IV**

- BSL-4. BSL-4 builds upon the containment requirements of BSL-3 and is the highest level of biological safety. There are a small number of BSL-4 labs in the United States and around the world. The microbes in a BSL-4 lab are dangerous and exotic, posing a high risk of aerosol-transmitted infections.

- Biohazard Level 4 usually includes dangerous viruses like Ebola, Marburg virus, Lassa fever, Bolivian hemorrhagic fever, and many other hemorrhagic viruses found in the tropics.
- In addition to biosafety level 3 considerations, biosafety level 4 laboratories must follow these safety protocols:
- Personnel must change clothing before entering the facility and shower upon exiting
- All materials must be decontaminated before leaving the facility
- Personnel must wear the PPE from lower BSL levels, as well as a full-body, air-supplied, positive pressure suit
- Access to a Class III biological safety cabinet
- BSL-4 labs are extremely isolated, often located in an isolated and restricted zone of a building or in a separate building entirely.
- BSL-4 labs also feature a dedicated supply of exhaust air, as well as vacuum lines and decontamination systems.

Biosafety Level	BSL-1	BSL-2	BSL-3	BSL-4
Description	· No Containment · Defined organisms · Unlikely to cause disease	· Containment · Moderate Risk · Disease of varying severity	· High Containment · Aerosol Transmission · Serious/Potentially lethal disease	· Max Containment · "Exotic," High-Risk Agents · Life-threatening disease
Sample Organisms	E.Coli	Influenza, HIV, Lyme Disease	Tuberculosis	Ebola Virus
Pathogen Type	Agents that present minimal potential hazard to personnel & the environment.	Agents associated with human disease & pose moderate hazards to personnel & the environment.	Indigenous or exotic agents, agents that present a potential for aerosol trans-mission, & agents causing serious or potentially lethal disease.	Dangerous & exotic agents that pose a high risk of aerosol-transmitted lab-oratory infections & life-threatening disease.
Autoclave Requirements	None	None	Pass-thru autoclave with Bioseal required in laboratory room.	Pass-thru autoclave with Bioseal required in laboratory room.

Quiz:

1. What is a level 2 biosafety cabinet?

   They provide both kinds of protection (of the samples and the environment) since makeup air is also HEPA-filtered. It involves a fan mounted in the top of the

cabinet that draws a curtain of sterile air over the workstation where the biological products are being handled.

2. Give importance of HEPA filters and examples.

   helps in the removal of all sorts of contamination particles including bacteria, fungi, and dust particles to maintain a safe and sterile environment. Ex: H14 filter

3. Differentiate between LAF and Biosafety cabinet.

   Laminar hood only provides protection to the sample and not to the personnel and the environment, whereas biosafety cabinets protect all three.

4. HEPA - **High- Efficiency Particulate Air**

5. The primary purpose of BSC : **to maintain a sterile environment**

6. The purpose of UV germicidal lamps in some BSCs : **To sterilize the work surface and contents.**

7. BSL Level that is used to work with microorganisms that are not known to consistently cause disease in healthy adults : **BSL 1**

8. The type of filter used commonly used in BSCs to capture and remove airborne particles: **HEPA Filter**

9. Specimens of Ebola and Marburg Virus for cell culture identification should be handled in **BSL-4**

10. BSL typically used for research involving agents that can cause serious or potentially lethal diseases and where there is higher risk of exposure: **BSL-3**

11. In BSL-2 laboratory, what type of protective clothing is required for laboratory personnel? : **Lab coat, gloves, safety goggles and face shield**

12. Temperature in degree centigrade and pressure in psi applied during autoclaving: **121 and 15**